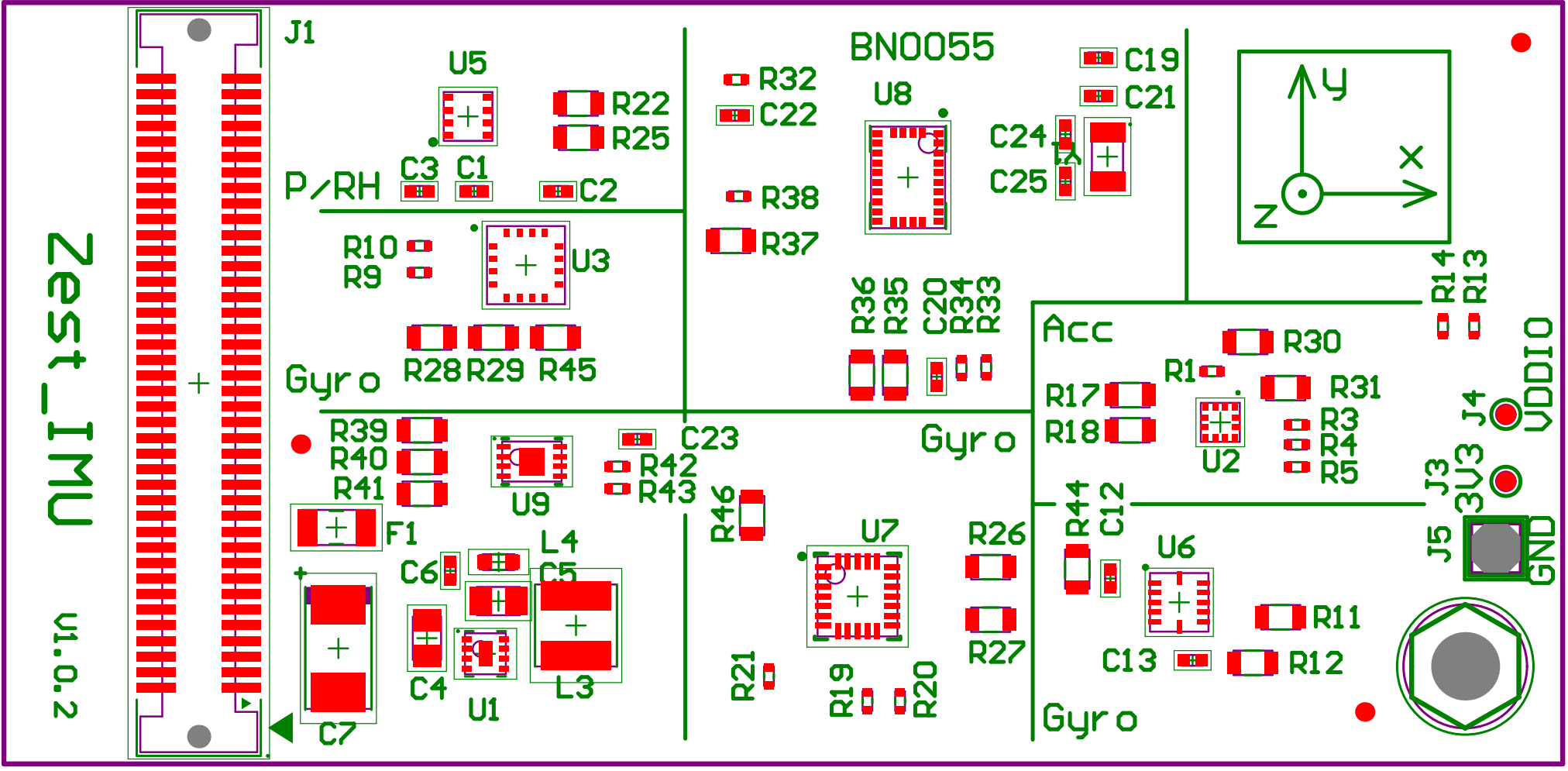

Top Overlay

Mecanical 1

Zest_Adapter_Shield V2.1.0

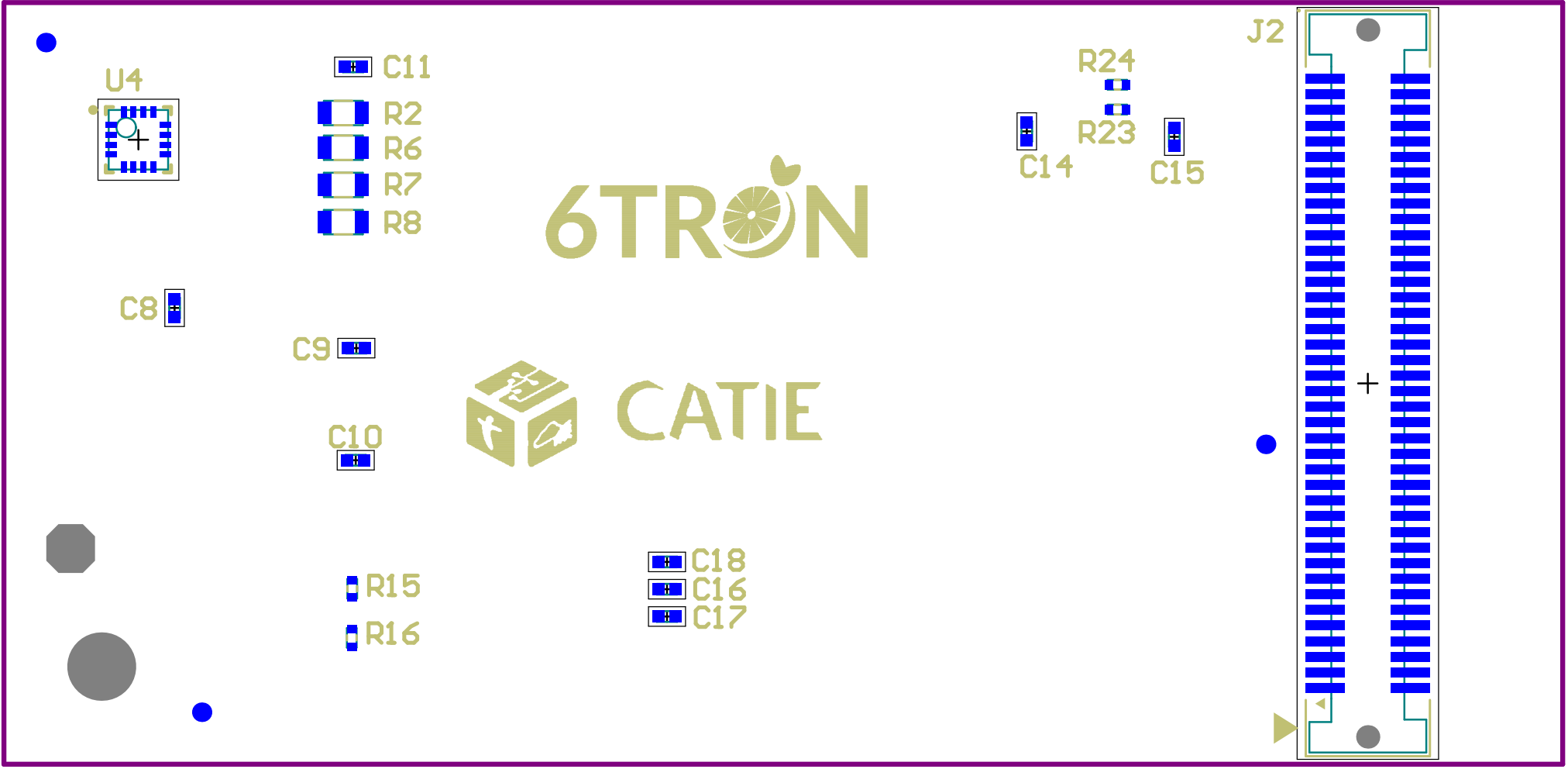

Bottom Overlay

Zest_Adapter_Shield V2.1.0

Mechanical 1