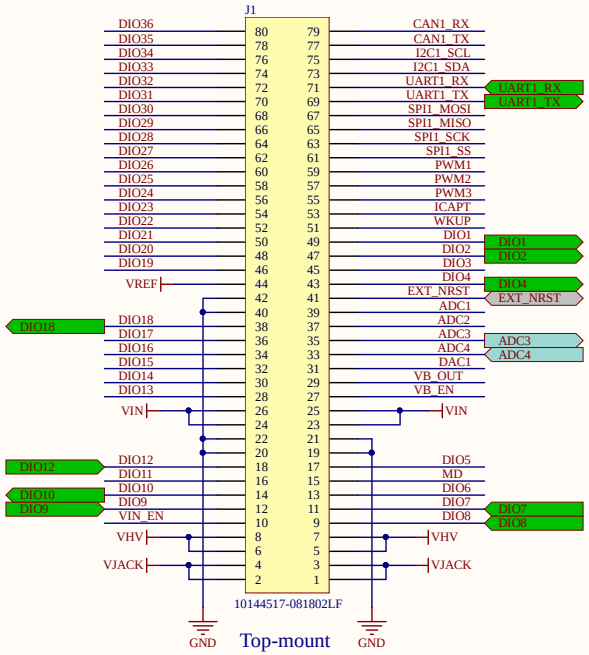

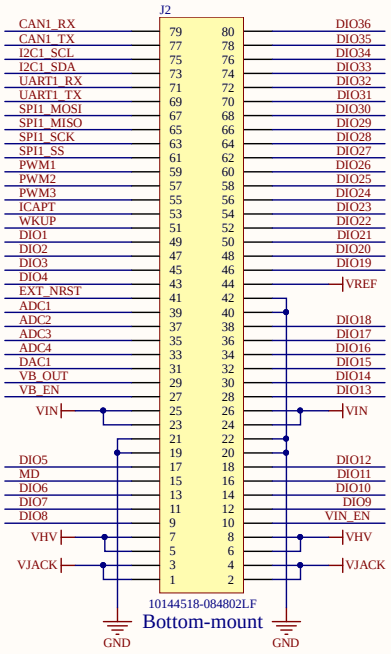

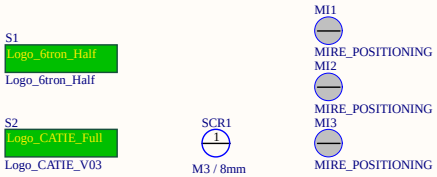

	R17	R18	
Tx		X	UART1_RX
	X		DIO12

	R19	R20	
Rx		X	UART1_TX
	X		DIO18

	R2	R3	R4	
PWRKEY	X			DIO1
		X		DIO2
			X	DIO4

Title: *Interconnect*		Version: *1.1.0*	CATIE
Board: *Zest_Radio_Heracles_224G*		Size: *A3*	
Project: *6TRON*		Sheet: *1 of 2*	
Author: *Lydia Sassi*	Date modified: *22/06/2020*		CC BY 4.0

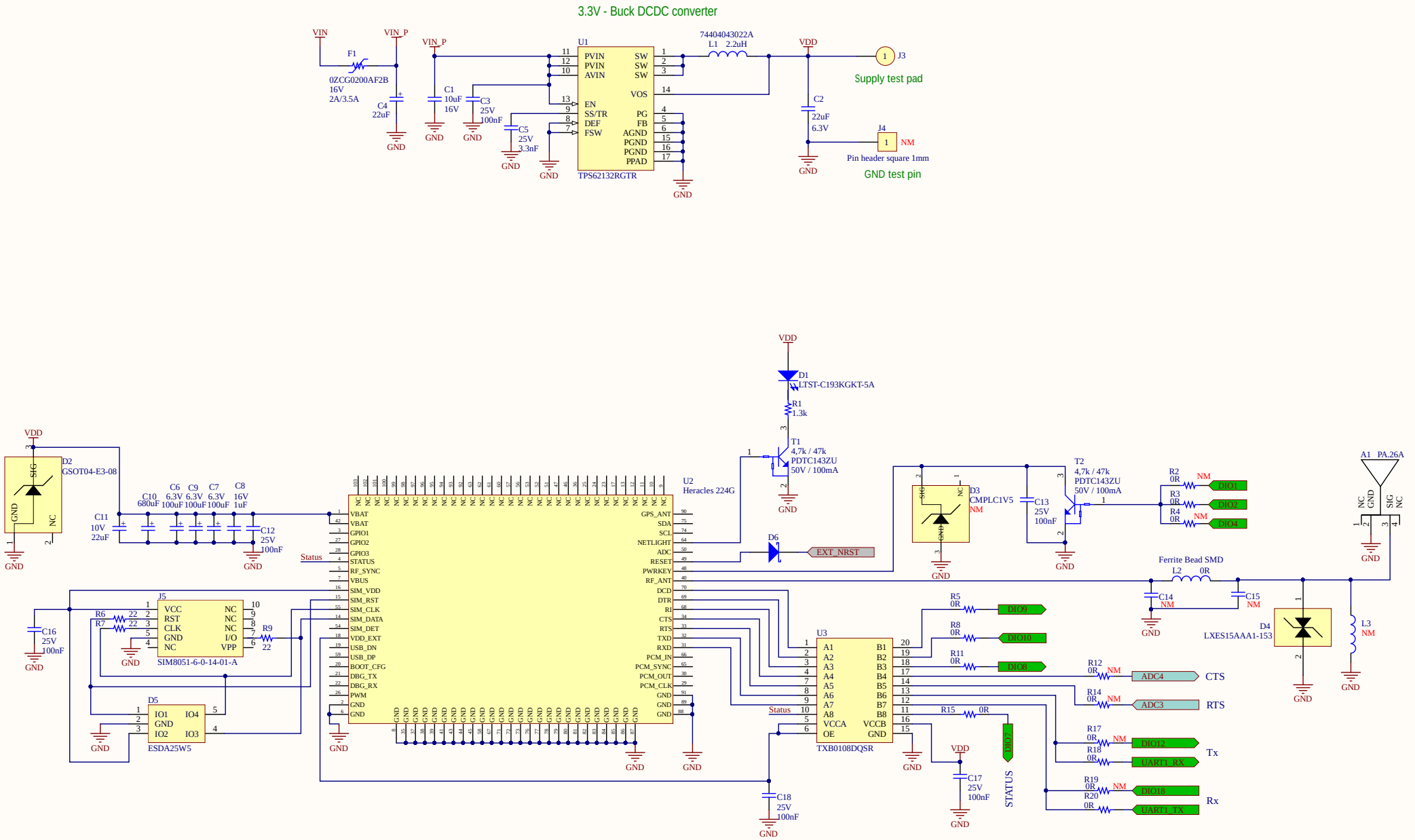

Title: *Module*		Version: *1.1.0*	CATIE
Board: *Zest_Radio_Heracles_224G*		Size: *A3*	
Project: *6TRON*		Sheet: *2 of 2*	
Author: *Lydia Sassi*	Date modified: *11/09/2020*		*CC BY 4.0*