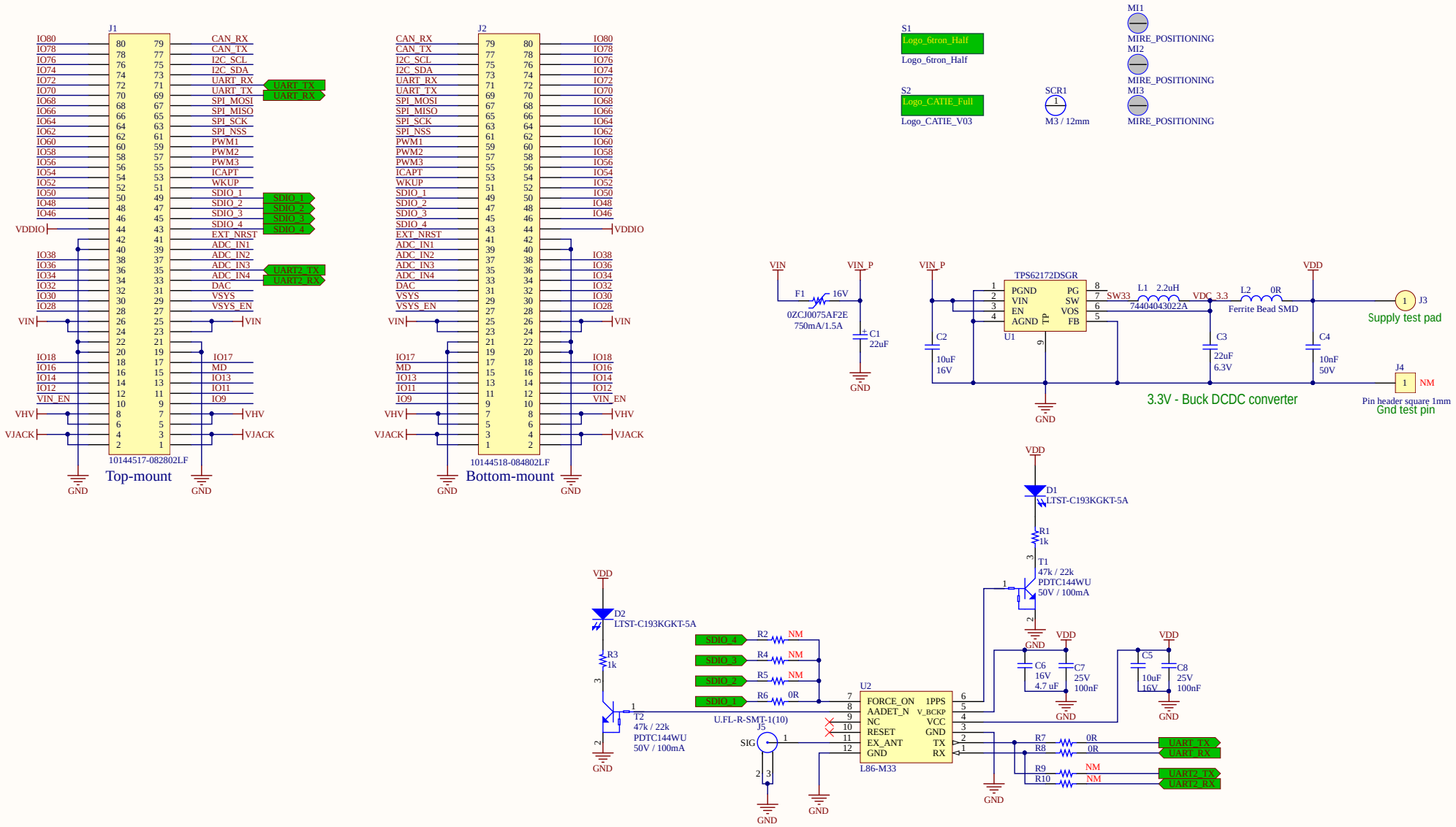

Title: *Interconnect*		Version: *1.0.1*	
Board: *Zest_GNSS_L86*		Size: *A3*	
Project: *6TRON*		Sheet: *1 of 1*	
Author: *Lydia Sassi*	Date modified: *27/11/2019*		

CC BY 4.0