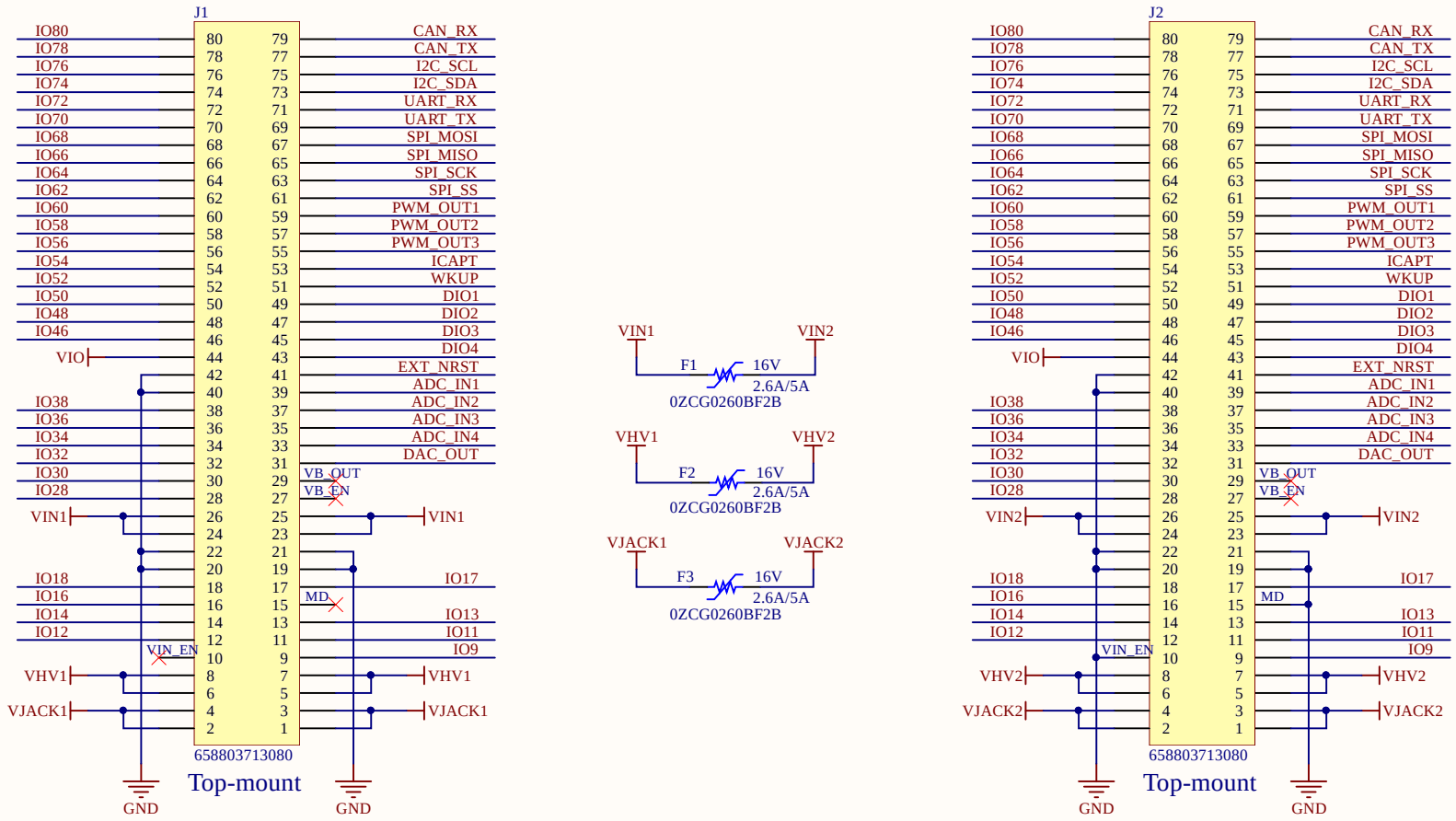

S1
Logo CATIE
LOGO_CATIE

S2
Logo 6TRON
LOGO_6TRON

S3
Logo ESD-Care
LOGO_ESD _CARE

MI1 MI2 MI3
MIRE_POSITIONING

SCR1 SCR2 SCR4 SCR3
0010080001VR
M3 / 8mm M3 / 8mm
Spacer M3 L8mm M/FMetal
screw M3-8 Nylon
Module 8mm spacer

SCR5 SCR6 SCR7 SCR8
M3 / 8mm M3 / 8mm M3 / 8mm M3 / 8mm
Spacer M3 L8mm round Female-Female Nylon

Title: *Interconnect*		Version: *1.0.0*	
Board: *Zest_Carrier_Extension*		Size: *A4*	
Project: *6TRON*		Sheet: *1 of 1*	
Author: *Aziz N'DIAYE*	Date modified: *21/09/2018*		

CC BY 4.0