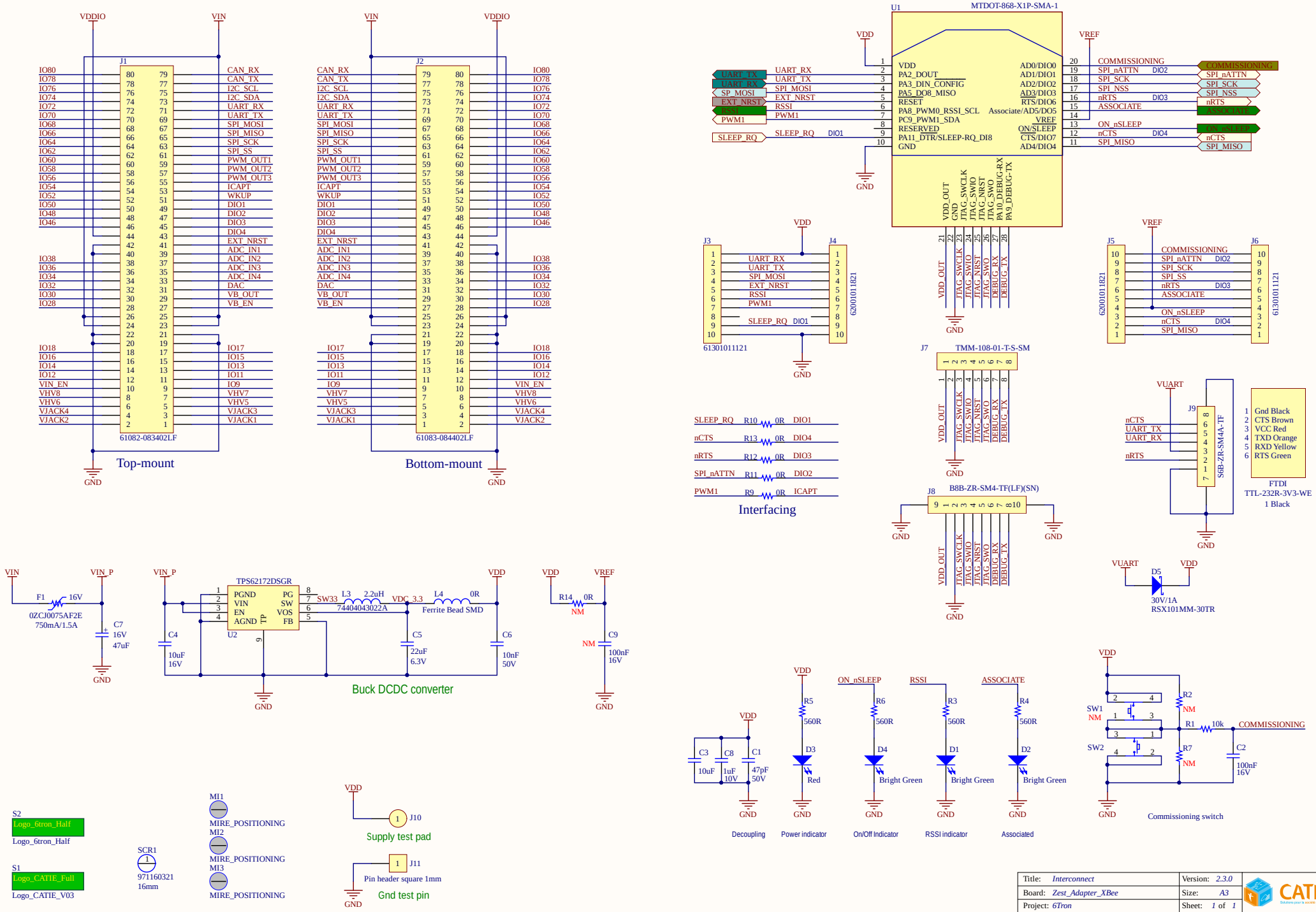

Title: *Interconnect*		Version: *2.3.0*	CATIE
Board: *Zest_Adapter_XBee*		Size: *A3*	
Project: *6Tron*		Sheet: *1 of 1*	
Author: *Olivier Chevalerias*	Date modified: *2017/04/07*	License: *License TBD*	