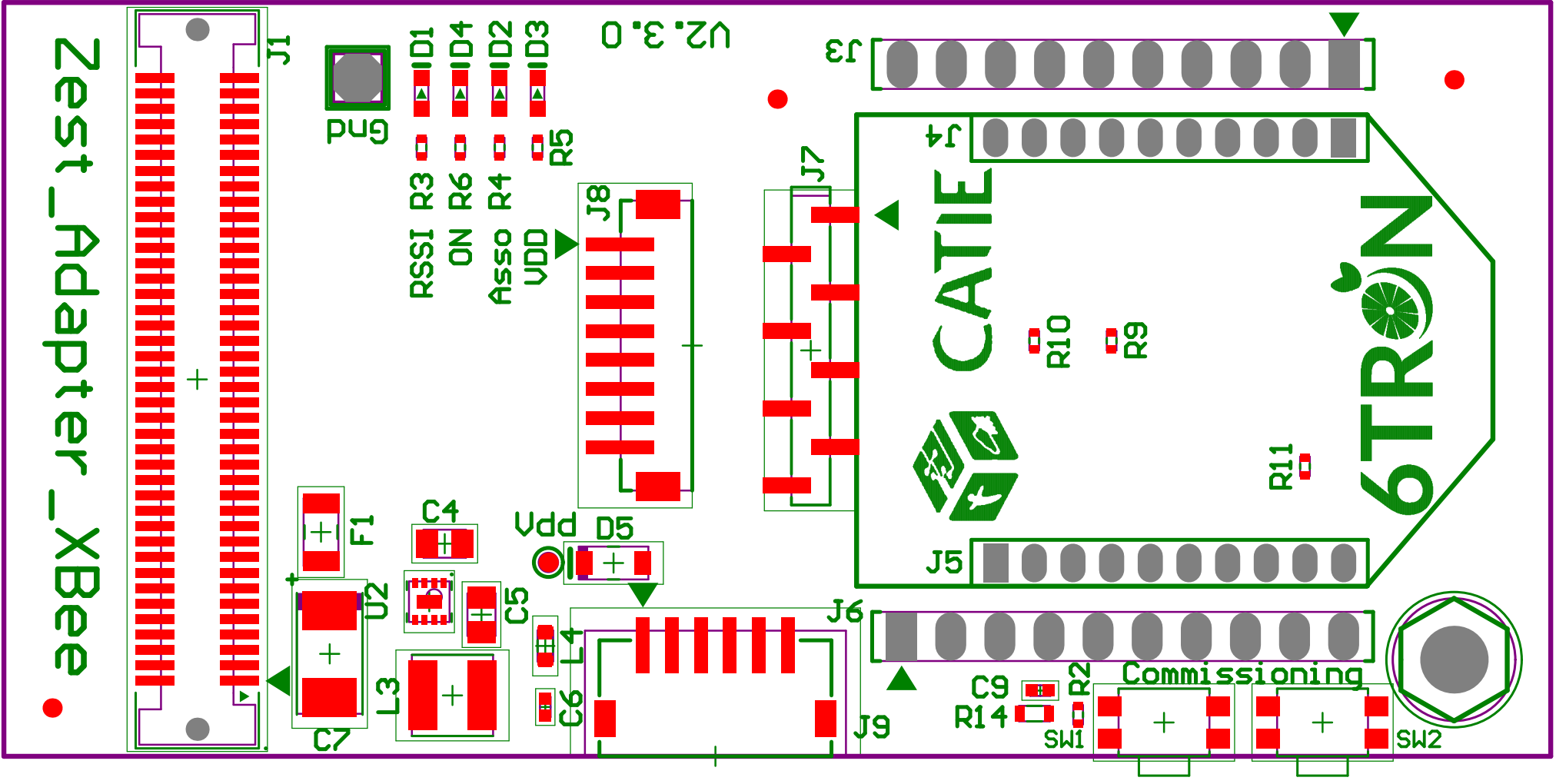

Top Overlay

Mecanical 1 Zest_Adapter_XBee V2.3.0

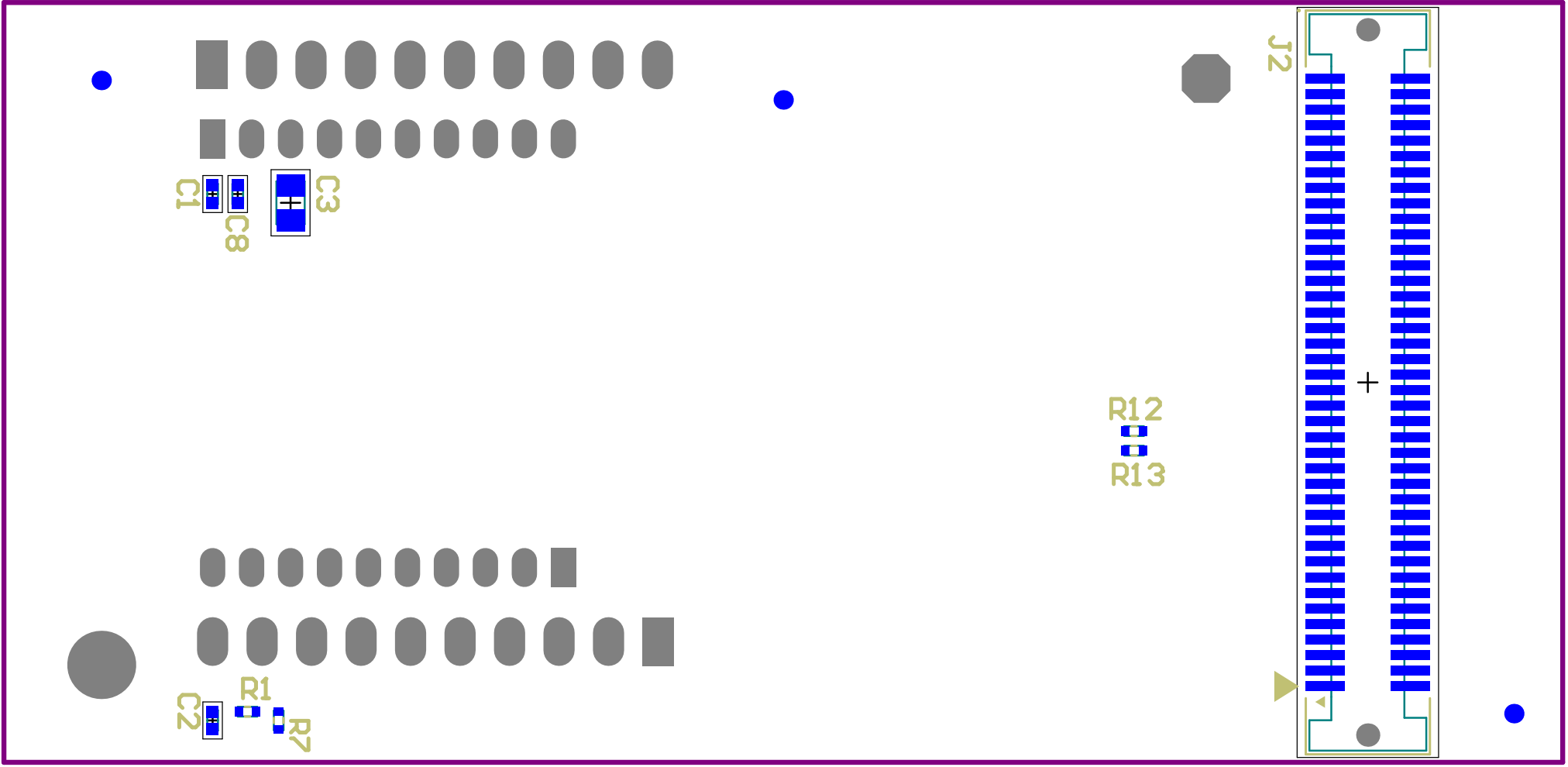

Bottom Overlay